AMCC-63

NOTES:-
1.) CUSTOMER TO MARK THE DIMENSIONS/CHARACTERISTICS THAT ARE CRITICAL TO FIT/FORM AND FUNCTION ON THE DRAWING.
2.) NUMBER OF COMPONENTS TO BE SUBMITTED FOR PILOT PRODUCTION LOT=_____PIECES.
3.) UNLESS OTHERWISE SPECIFIED, STANDARD PACKAGING USED BY HITACHI METGLAS WILL BE PROVIDED.
4.) ALL PRODUCTION RECORDS AND DATA PERTAINING TO THIS PRODUCT WILL BE RETAINED FOR A PERIOD OF 1 YEAR FROM THE DATE OF SHIPMENT.

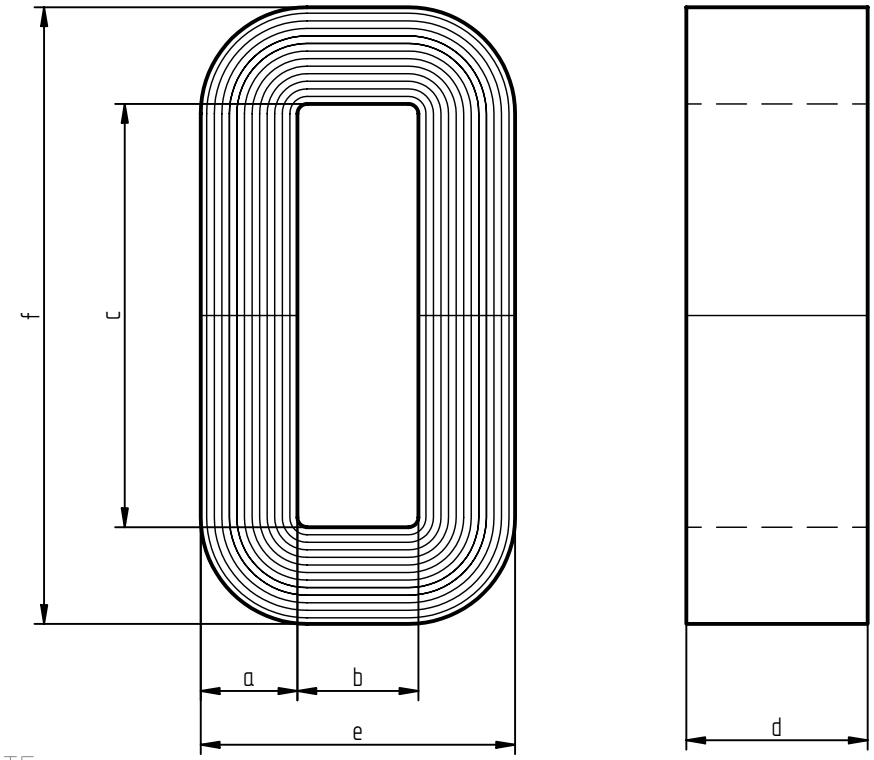

NOTE :-

1. ALL MEASUREMENTS ARE DONE AT ROOM TEMPERATURE.
2. WEIGHT INCLUDES 2% EPOXY WEIGHT.
3. CONTINUOUS OPERATING TEMPERATURE : 155°C

CORE MATERIAL: MEGLAS®ALLOY 2605SA1

PHYSICAL SPECIFICATIONS

Core Build	(a) mm	16.0±1.0
Window Width	(b) mm	20.0+1.0/−0.0
Window Length	(c) mm	70.0+2.5/−0.0
Core Height	(d) mm	30.0+0.5/−0.0
Core Width	(e) mm	52.0+1.0/−0.5
Core Length	(f) mm	102.0+3.0/−0.0
Mean Magnetic Path	(lm) cm	25.30
Net Area	(Ac) cm^2	3.90
Window Area	(Wa) cm^2	14.00
Area Product	(Ap) cm^4	54.60
Weight of Core	g	710 (Nom.)

ELECTRICAL SPECIFICATIONS

Core Loss @ 16kHz, 0.037 T ≤ 1.38W\Kg.

lm = mean magnetic path length
Ac = net cross-sectional area
Wa = core window area

NOTE :-
THIS DRAWING, THE PROPERTY OF HITACHI METGLAS INDIA PVT. LTD. IS FURNISHED SUBJECT TO RETURN ON DEMAND AND THE CONDITION THAT THE INFORMATION AND TECHNOLOGY EMBODIED HEREIN SHALL NOT BE DISCLOSED OR USED AND THE DRAWING SHALL NOT BE REPRODUCED OR COPIED IN WHOLE OR IN PART EXCEPT AS PREVIOUSLY AUTHORIZED IN WRITING. ANY PERSON WHO MAY RECEIVE OR OBSERVE THIS DESIGN WILL BE HELD STRICTLY LIABLE FOR ANY VIOLATION WHETHER WILLFUL OR NEGLIGENT.

TOLERANCES UNLESS OTHERWISE SPECIFIED

NO.	REVISION	BY	APPR.	DATE
1.)	CORE LOSS WAS WRITTEN MEASURED @ 0.37T BY MISTAKE,INSTEAD OF 0.037T		SR	04/19/02
2.)	COMPANY NAME WAS HONEYWELL.	SA	RK	02/14/04
3.)	ADDED NOTE#3. (AS PER PCN002).	SA	RK	07/26/04
4.)	PRODUCT & DRAWING FORMAT REVISED. (AS PER PCN004)	RG	RK	25/09/06

DIMENSIONS	MM	DESCRIPTION	C-CORE DESIGN	SHEET NO.	DRAWING NO.	REV. NO.
SCALE	N.T.S	MATERIAL	AS NOTED	1 OF 1	AMCC-63	4
PROJECTION	THIRD ANGLE					

HITACHI METGLAS

DRAWN	DATE	CHECKED	DATE	APPROVED	DATE
SR	07/12/01	SR	07/12/01	RH,RM,ST	07/19/01

EG/FM/11/2